efi MEZZERA SINGEING

Singeing and Impregnation Line for Open Width Woven Fabric

Fiber singeing and impregnating line.

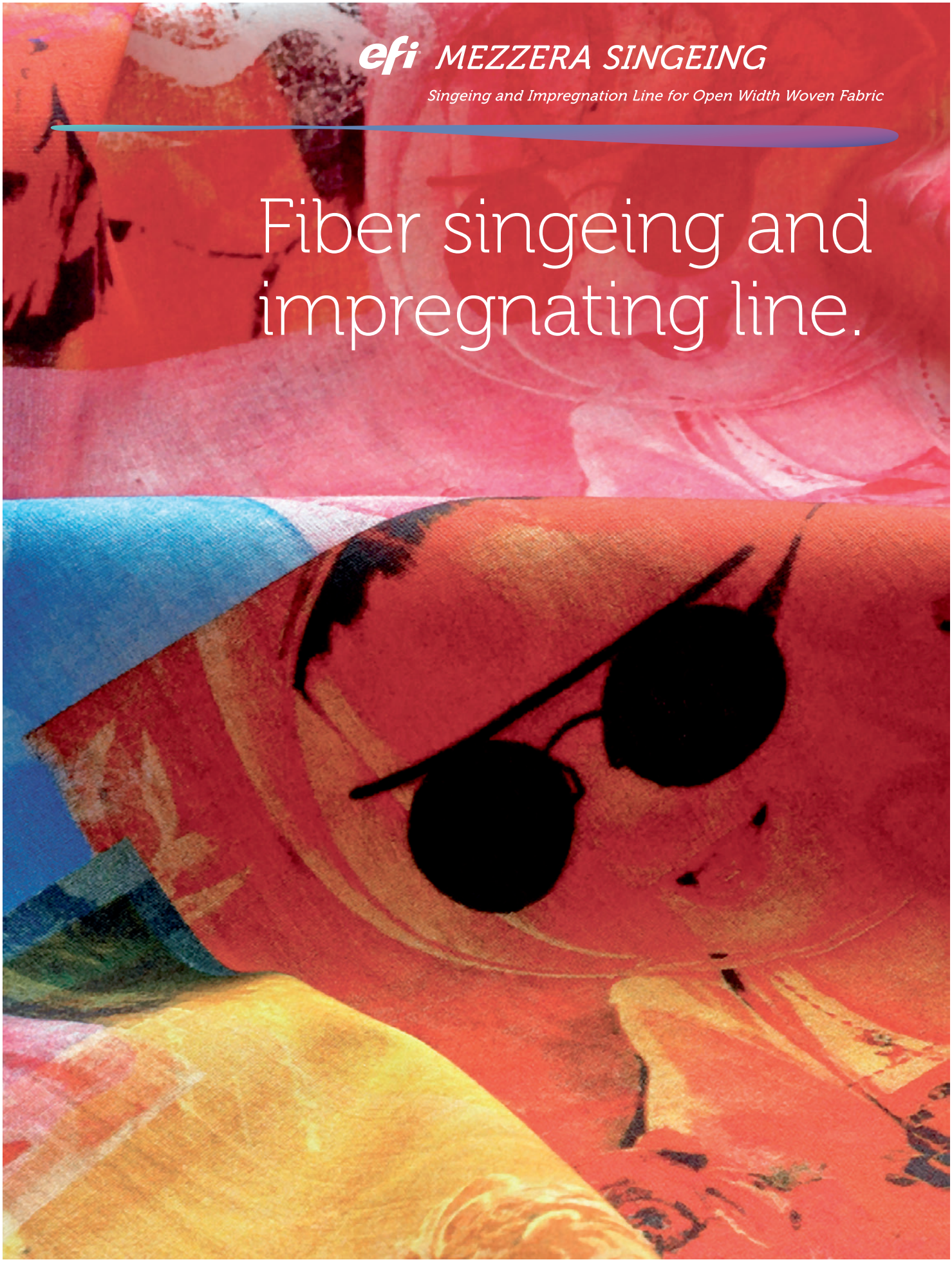

Singeing and impregnating line

- Modern singeing and impregnating technology
- Two movable burners with variable flame intensities
- Top or top/bottom fabric treatment
- Automatic chemical-product dosage based on weight of goods

Current market demands are such, the companies are required to satisfy high quality standards based on efficient production management. As such, the need to use modern technology is of prime importance in order to increase product quality and, at the same time, to reduce costs and working times.

The singeing machine is an excellent way of obtaining high quality fabrics given that singeing improves all the characteristics of the finished garment. When the short fibers that stick out of yarn are singed, the fabric becomes smooth and clean.

This effect enhances the fabric and gives it greater resistance to dirt. Singeing also greatly reduces pilling and is thus an indispensable pre-printing process for fabrics with extremely sharp motifs and outlines.

Fabrics that have undergone a singeing treatment are easier and faster to desize if they are immediately impregnated with the desizing liquor.

The best singeing effect is always tied to good fabric preparation, by way of impregnation treatment using constant concentration of chemical products, and to correct flame adjustment, based on the fibers to be treated. The singeing machine gives a good result and does not leave any burn marks.

There is almost no damage to heat sensitive fibers (such as polyester) and resistance to tearing is not undermined as a result of excessive singeing. One recurring problem with the process is that most of the unwanted short fibers on non desized weft fabrics do not protrude from the yarn; they are stuck to the fabric owing to the size present on the fabric.

A good machine design ensures that the flame does not flutter. It is intense and uniform and singes even these difficult fibers. Furthermore, the two burners have been purposely designed to supply enough heat and kinetic energy to ensure singeing even though a cushion of air and steam builds up owing to the reaction between the cold, and wet fabric and the flame which makes the treatment difficult.

Burners

The burners, together with the combustible mixture of air and gas, are the heart of the singeing machine. The two burners ensure a uniform flame along its whole length.

The flame can be adjusted without undermining the quality.

The singeing machine can be used on any kind of fabric, especially cottons and polyesters, even though these two fibers have completely different reactions when exposed to a flame. The gas pressure is 70 mbars and the combustion air is supplied by an appropriate blower. The air/gas mixture, which is adjusted by a powered mixer, meets the stoichiometric requirements to guarantee perfect combustion and constant yield thanks to a proportional mixing valve. By using a pyrometer to control the fabric temperature, it is possible to set the singing effect based on the height of the flame or on the working speed. The singeing machine comes with electronic firing, a device to check that the flame is lit, and other safety equipment.

The horizontal, pneumatically-controlled burners can be adjusted to a micron and positioned anywhere along the fabric path. They are usually positioned:

- At the tangent edge of the fabric roll to obtain superficial singeing to eliminate small protruding fibers. This is ideal when treating very light and delicate fabrics.
- On the water-cooled roller perpendicular to the fabric.
- The fabric is kept relatively cool as the back of the fabric runs on the cooled roller. This is ideal to treat synthetic and heat-sensitive fabrics.
- Before the water-cooled roller perpendicular to the fabric. The best singeing effect will be obtained in this position.
- This position is ideal for natural fibers.

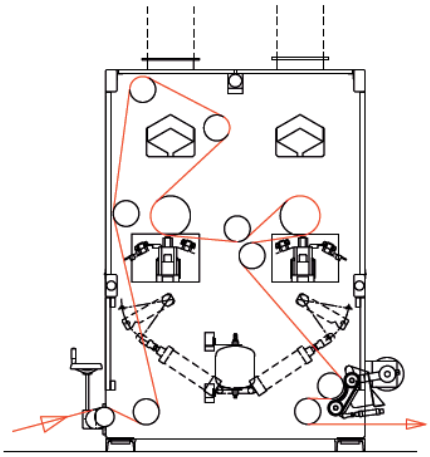

Fabric path and cooling system

Depending on the kind of drawing in, fabric singeing may be carried out:

- Only on the top of the fabric using a single flame.
- On both the top and bottom of the fabric.
- Twice on the top side only, over a single run.

During the singeing treatment, the guide rollers are cooled by a controlled-temperature forced circulation system. There are two cooling systems.

- Burner cooling: two water pipes run alongside the burners. Water feed is automatic when the burners are lit and switches off a few seconds after the burners are switched off. A flowmeter has been installed along the cooling line to enable burner function.
- Fabric cooling: the fabric not only runs over the two singeing rollers but also runs over a series of cooling rollers. A pump ensures the cooling water circulates in a closed circuit to prevent condensation from forming on the rollers. A safety thermostat switches off the burners and stops the machine if the temperature exceeds the set temperature.

Fabric brushing system

An efficient brushing system prepares the fabric for singeing by removing fluff and large impurities.

Spark extinguishing device

The system allows to extinguish the sparks from the fabric selvedges, made by the compression rubber belts against the driving cylinders at the exit of the singeing machine and before the beating device. This system avoids the propagation of the flame to the fabric.

Beating device

A very efficient beating device with a forced suction system and wet filter, which removes the exciding powder produced by the fibers combustion from the fabric. This allows an easy impregnation of the fabric during the following processes.

Gas exhauster with filter

The gas exhauster ensures that the fumes released during the working process are exhausted. This device consists of two fans and two ventilation pipes in the hood of the singeing machine.

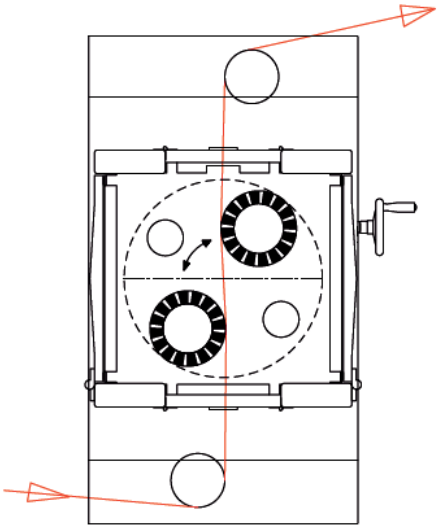

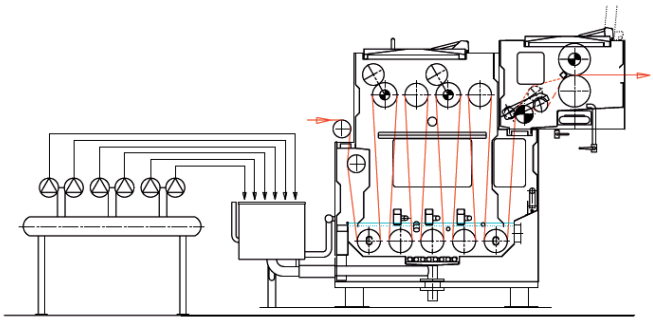

Automatic control

The singeing machine, including all of its safety and control devices, can be accurately set, and the data can be recalled for future production needs.

Furthermore, the high risk usually associated with a combustion machine has been reduced to a minimum by using a completely automatic control system that will stop the machine if there is a malfunction. This machine technologically meets the solid design and manufacturing traditions that have always characterized our products.

Impregnating vat with chemical product dosage

Technological reasons make the singeing-impregnating combination the best solution for desizing and cold bleaching treatments. Impregnation of dry fabrics takes place as the fabric moves through the vat.

The desizing and bleaching impregnating liquor is prepared in the vat itself using a completely automatic dosage system. Liquor circulation and mixing guarantee that the concentration of the chemical products is perfectly uniform. The liquor level is kept constant by the set top-up program.

The impregnating unit includes a vat with rollers to contain 49 ft (15 m) of fabric. The amount of fabric and the squeezing manage excellent pick up and penetration of the liquor.

The control system is based on a state-of-the-art PLC installed in a watertight cabinet. This unit is controlled from an ergonomic control panel to save, control, and reproduce the treatment parameters.

All production recipes are memorized and can be recalled when the same production cycle is required for a number of batches.

The products are thus already uniformly dosed during the preparation stage. The same dosage times are used to feed the various amounts of products into the machine, and the volume calculation system automatically subtracts the amount of products from the volume of liquor. Product dosage occurs at the same time water flows in. Liquor top-up is proportional to the weight of the fabric to be treated.

Each chemical product is dosed directly into the liquor in the filter where they are then mixed with new water. The liquor thus mixed pours into the vat through two chutes.

The fabric, drawn in short vertical loops to avoid creases forming, undergoes efficient treatment. The top rollers can be driven and the tension is kept even by using a compressed-air dandy roll.

All the rollers are mounted externally on bearings. Fixed, movable, controlled, threaded, and curved expansion bars ensure that the fabric is fully opened. Good speed control ensures synchronization with all other units connected into the line.

The low operating costs are the result of the painstaking design. Each load-bearing vat is completely made of stainless steel and reinforced with strengthening ribs. There is an inspection door on each side of the unit to monitor fabric flow and the drawing in operation.

TECHNICAL DATA	
Roller width (in)	**70.87+141.73**
Useful width (in)	**62.99+14.17**
Flame type	**DIRECT**
Installed thermic power (min-max) (kWxm)	**25-100**
Installed electric power (kW)	**4.5**
Exhaust air flow (m3/h)	**1.32**
Cooling water consumption (gal)	**5**
Max gas consumption (m3xm)	**9**
Gas pressure (mbar)	**70**

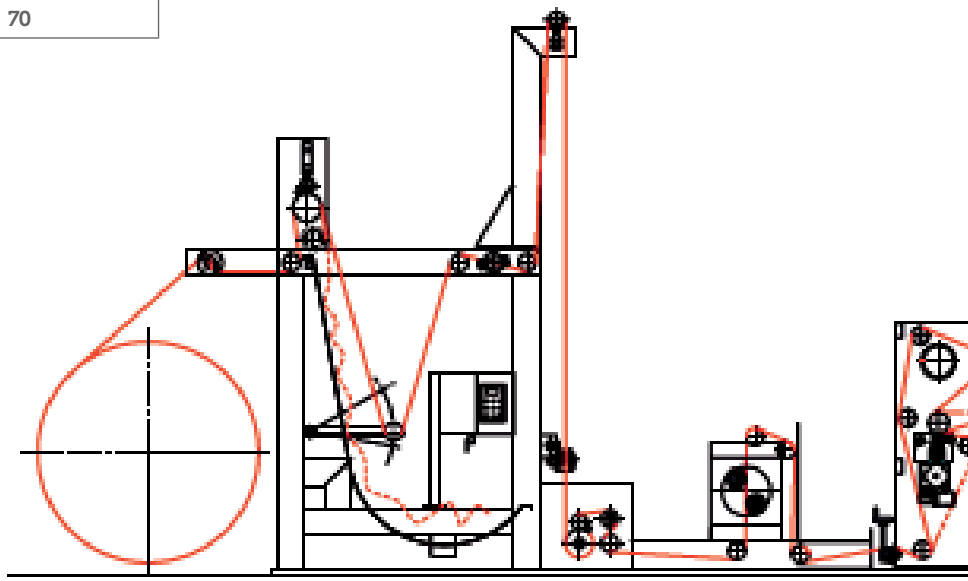

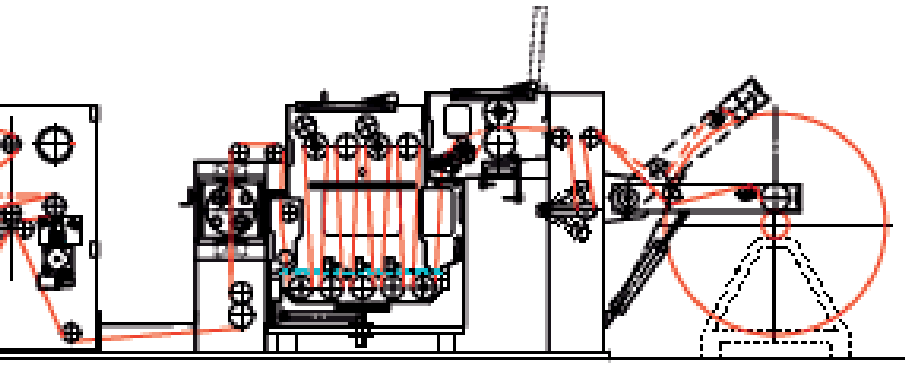

The features that makes this machine a point of reference on the market are:

- Maximum speed of 393 ft/min (120 m/min).
- Low energy consumption.
- Thermoregulator temperature control.
- Intense and efficient liquor washing.
- Simple and intuitive control system to set most important operating parameters.

The singeing and impregnating line merges the most recent requirements in technology with a level of reliability that ensures production schedules are met. The care employed in the manufacturing process ensures the machine will last for a long time and maintenance costs will be reduced to a minimum.

EFI fuels success.

We develop breakthrough technologies for the manufacturing of signage, packaging, textiles, ceramic tiles, and personalized documents, with a wide range of printers, inks, digital front ends, and a comprehensive business and production workflow suite that transforms and streamlines the entire production process, increasing your competitiveness and boosting productivity. Visit www.efi.com/reggiani or call 650-357-3500 for more information.

Nothing herein should be construed as a warranty in addition to the express warranty statement provided with EFI products and services.

The APPS logo, AutoCal, Auto-Count, Balance, BESTColor, BioVu, BioWare, ColorPASS, Colorproof, ColorWise, Command WorkStation, CopyNet, Cretachrom, Cretaprint, the Cretaprint logo, Cretaprinter, Cretaroller, Digital StoreFront, DirectSmile, DocBuilder, DocBuilder Pro, DockNet, DocStream, DSFdesign Studio, Dynamic Wedge, EDOX, EFI, the EFI logo, Electronics For Imaging, Entrac, EPCount, EPPhoto, EPRegister, EPStatus, Estimate, ExpressPay, FabriVU, Fast-4, Fiery, the Fiery logo, Fiery Driven, the Fiery Driven logo, Fiery JobFlow, Fiery JobMaster, Fiery Link, Fiery Navigator, Fiery Prints, the Fiery Prints logo, Fiery Spark, FreeForm, Hagen, Inktensity, Inkware, Jetrion, the Jetrion logo, LapNet, Logic, Metrix, MicroPress, MiniNet, Monarch, OneFlow, Pace, Pecas, Pecas Vision, PhotoXposure, PressVu, Printcafe, PrinterSite, PrintFlow, PrintMe, the PrintMe logo, PrintSmith, PrintSmith Site, PrintStream, Print to Win, Prograph, PSI, PSI Flexo, Radius, Remoteproof, RIPChips, RIP-While-Print, Screenproof, SendMe, Sincrolor, Splash, Spot-On, TrackNet, UltraPress, UltraTex, UltraVu, UV Series 50, VisualCal, VUTEk, the VUTEk logo, and WebTools are trademarks of Electronics For Imaging, Inc. and/or its wholly owned subsidiaries in the U.S. and/or certain other countries.

All other terms and product names may be trademarks or registered trademarks of their respective owners, and are hereby acknowledged.

© 2016 ELECTRONICS FOR IMAGING, INC. ALL RIGHTS RESERVED. | WWW.EFI.COM

GVP.232.11.15_US